light + ventilation trim SE

installation instruction



Step 1

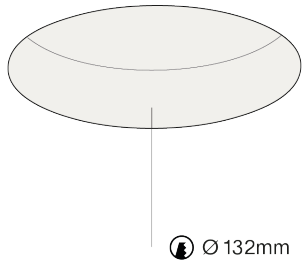

Cut a round hole (Ø 132 h 85).

Step 2

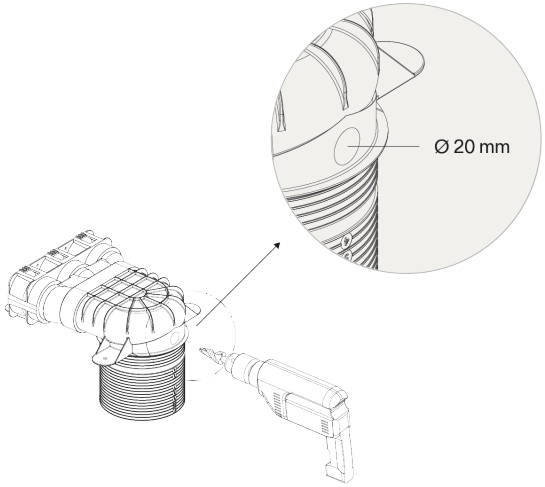

Use a step drill to cut a Ø20 hole into the Ø125 valve adapter of your choice. A hole can be drilled in any type or brand of Ø125 valve adapter.

Step 3

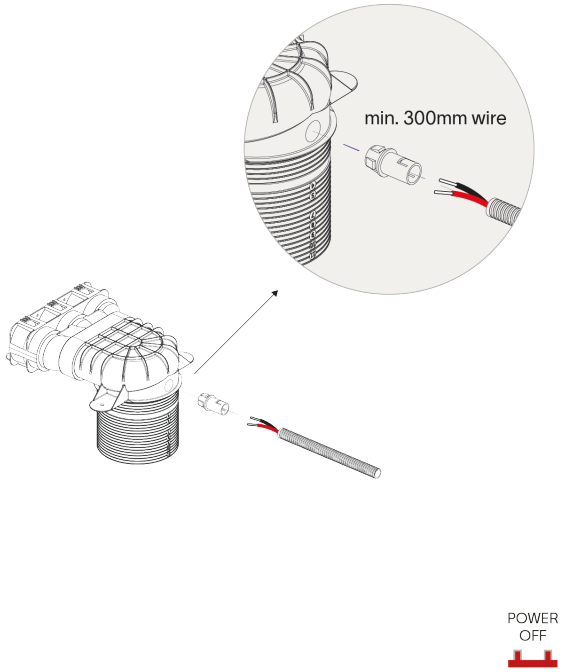

Connect the Ø16 preflex and the valve adapter with the prado connector. Make sure to add minimal 300mm of wire into the valve adapter. Driver must be placed remotely to remain accessible.

Step 4

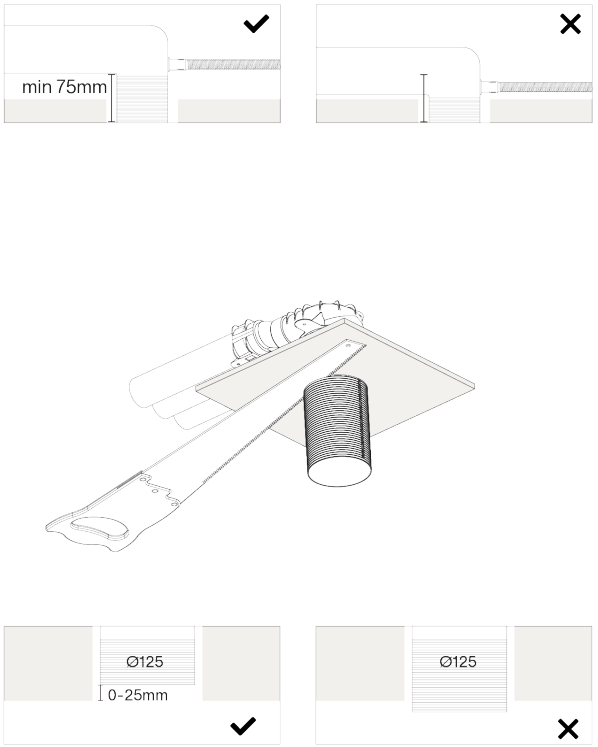

Cut off the excess length of the valve adapter (between 0 and 25 mm above final ceiling level). The remaining vertical part of the adapter (before the start of the turn) must be at least 75 mm high for the plaster ring (connector can’t be placed in this zone).

Step 5

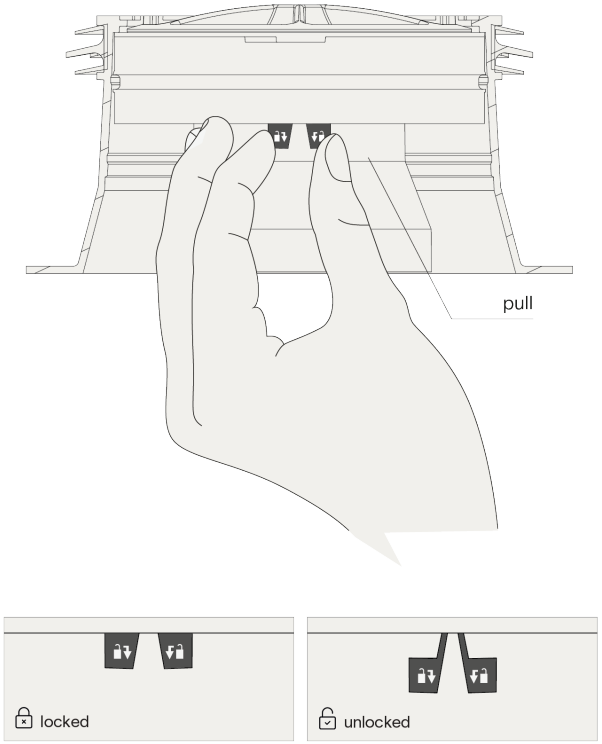

Gently pull the lock out before adjusting the air flow.

Step 6

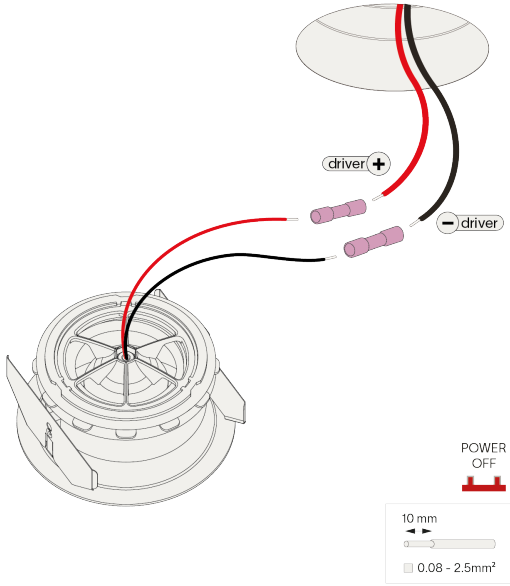

constant current (mA)	typical forward voltage (V)	typical power (W)
350	16,9	5,9
500	17,4	8,7

Connect the wires with waterproof connectors for serial connection, respect polarity combine with prado LED-driver.

Step 7

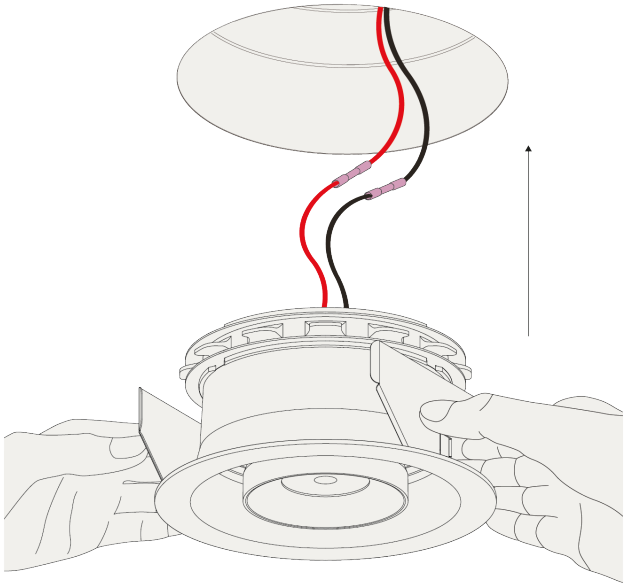

Gently insert the fixture into the ceiling.

Step 8

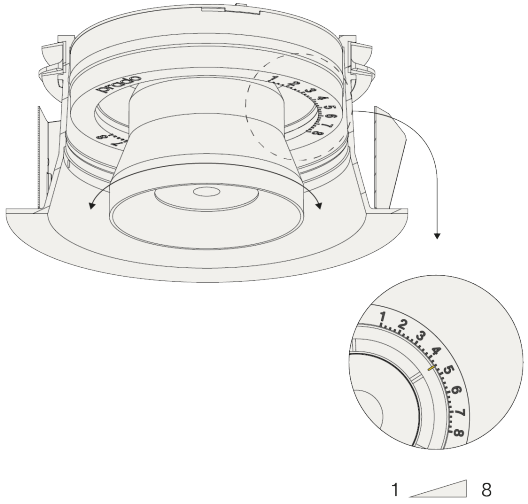

Twist the luminaire to adjust the ventilation flow level.

Step 9

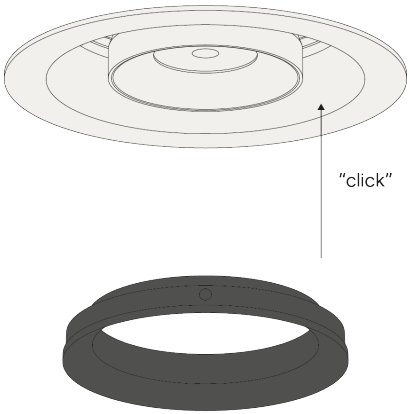

Step 10

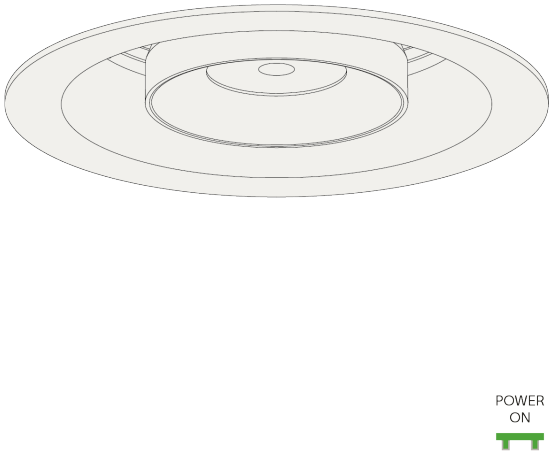

Insert the design ring to lock the ventilation valve.



Replace glass lens when broken.
Luminaire shall only be used together with glass lens.